> Turning > Milling > Powertrain > Composites > Process Technology > Maintenance > Automation & Controls > Core Components

Cryogenic Cooling of Cutting Tools for Aerospace Applications

13-September, 2012
Douglas Watts
Chief Technical Officer

NAG

NEN
cryogenic machining

Conventional Coolants

- Safety concerns (toxicity, bacteria, fungi)
- Used cutting fluid must be disposed of:
  - Oil and other wastes present disposal impact on the environment
  - Regulation and enforcement specify mitigation to the environment and associated costs

- Significant investment costs for coolant supply, filtration, and mist collection equipment
- High on-going lifecycle costs of coolant based manufacturing systems
- Largely inefficient from a cooling and lubrication perspective
- Generally effective for chip management

MQL Alternative to Traditional Cutting Fluids

- **M**inimum **Q**uantity **L**ubrication (MQL) - Technology based on supplying the cutting edge with a small quantity of lubricant mixed with air
- MQL uses oil, mostly based on vegetables or ester:
  - Less harmful to the human body and the environment
- Goals of MQL Include:
  - Economical
  - Direct lubrication (less friction in the process)
  - Increased tool life (increased machine availability)
  - Dry chips, clean work parts, reduced disposal costs
  - Less energy consumption
- MAG is a world leader in MQL technology:
  - Installed more than 300 MQL machines in a 10 year period ending in 2008
  - More than doubled that quantity since 2009
  - Developed significant expertise and “know-how” for dry and near dry machining

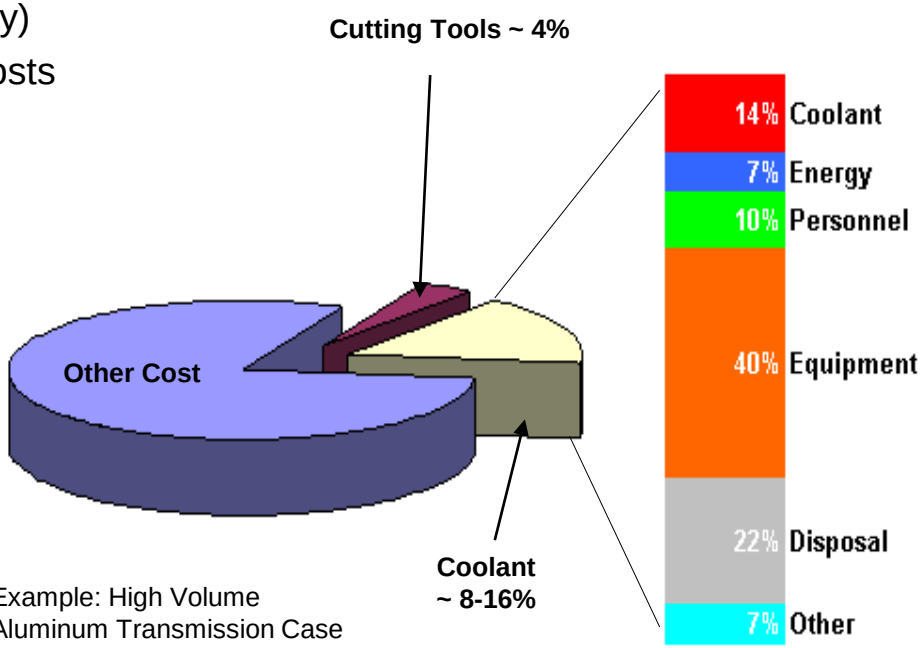

Example: High Volume Aluminum Transmission Case

Next Generation of Dry Machining

MQL Technology:

- Yields small increases in cutting speed & tool life with better surface finish
- Eliminates coolant systems and the energy to run them
- Eliminates coolant disposal costs
- Potentially eliminates in-process washers
- Improves maintainability
- Increases value of reclaimed chips
- Reduces investment and operating costs

MAG's Vision of Next Generation Dry Machining:

- Evolve from MQL dry machining expertise
- Replace or supplement MQL with Cryogenic technology enabling higher cutting speeds and productivity

The Basics Cutting Tool Heat

- The process of cutting produces heat
- The faster the cutting speed the higher the heat
- Any cooling media helps reduce cutting heat (water= +70° F, LN_2= -321° F)
- Each tool material has a **Critical Temperature** where it will deteriorate to failure quickly
- Different work materials bring tools to **critical temperatures** at different cutting speeds

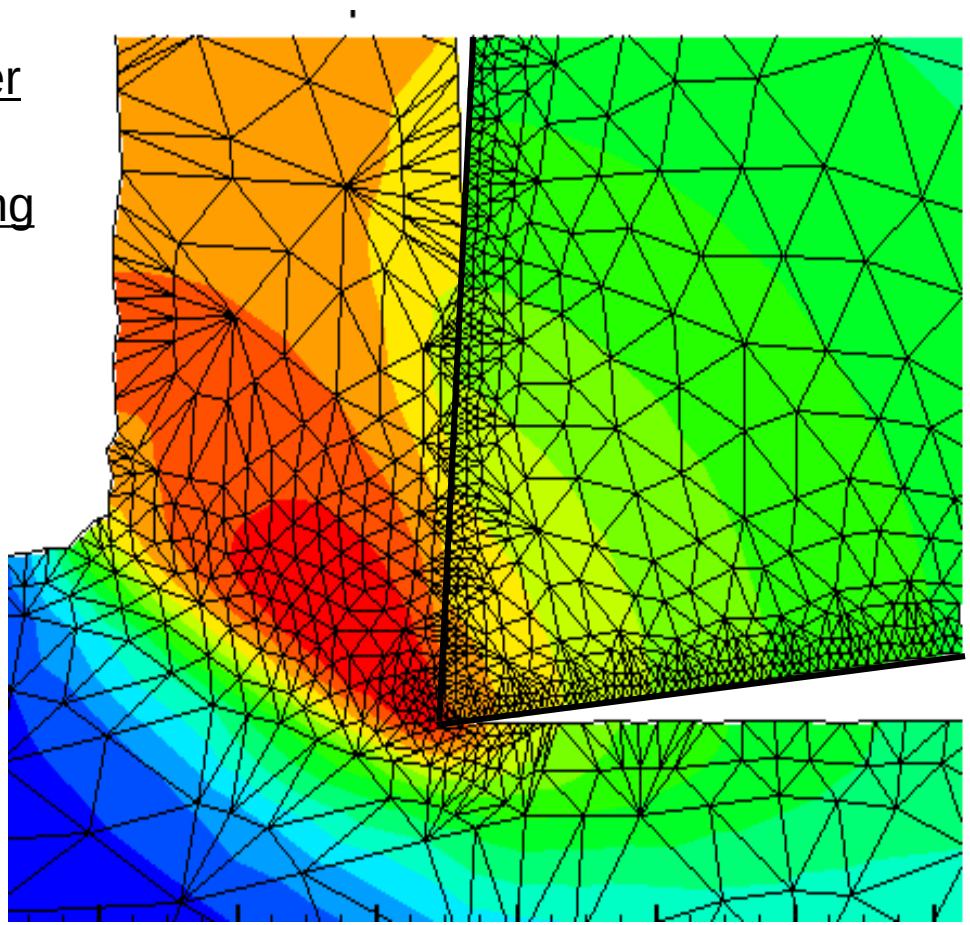

Machining Wear Mechanisms

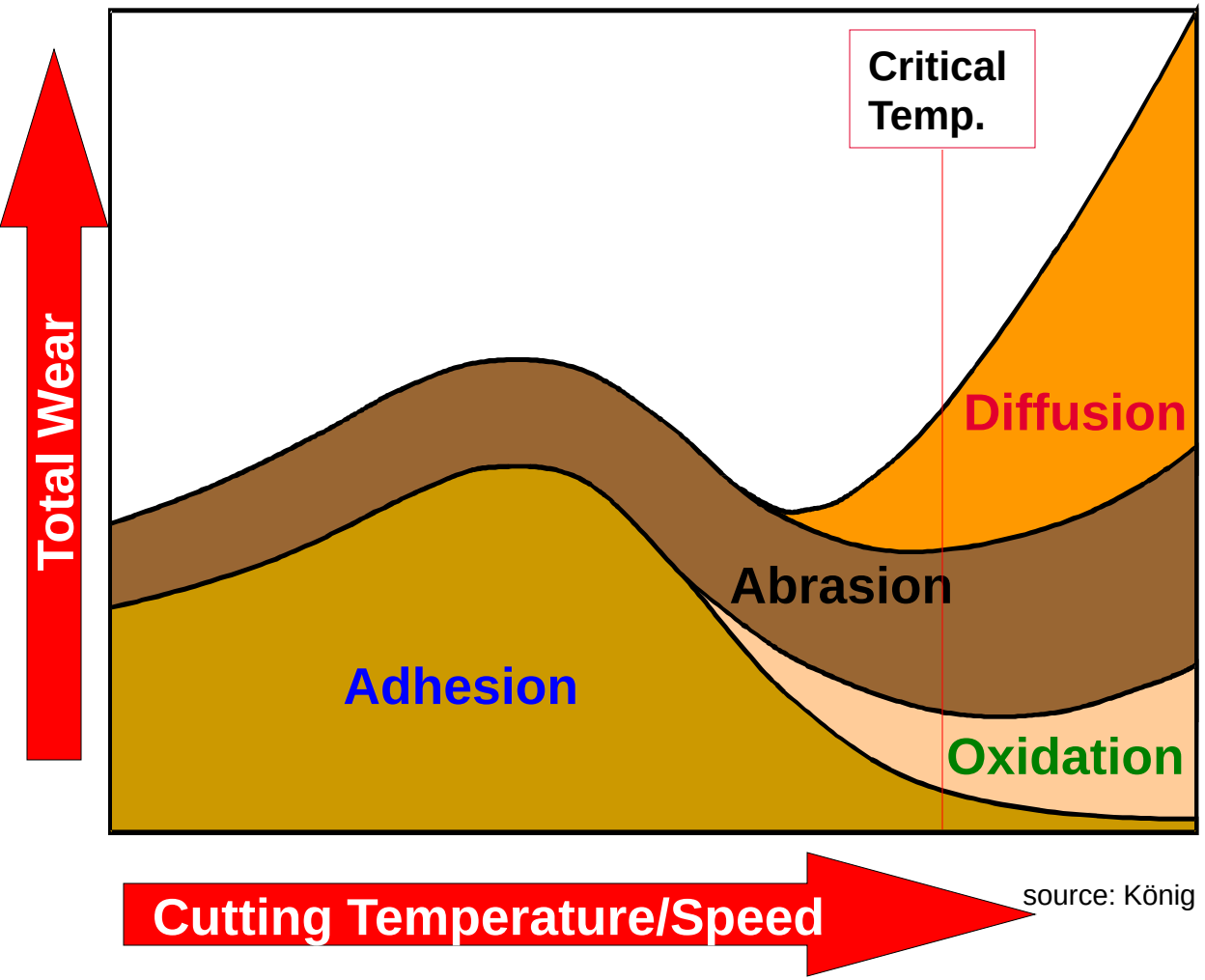

source: König

- **Adhesion**
  (Thermal mechanical) reduced with work material temperature
- **Abrasion** (mechanical) increases with heat softening of tool material
- **Oxidation** starts near critical temperature and climbs
- **Diffusion** starts near critical temperature & accelerates with heat

Cryogenic “Delta T” Applied to Tool Life

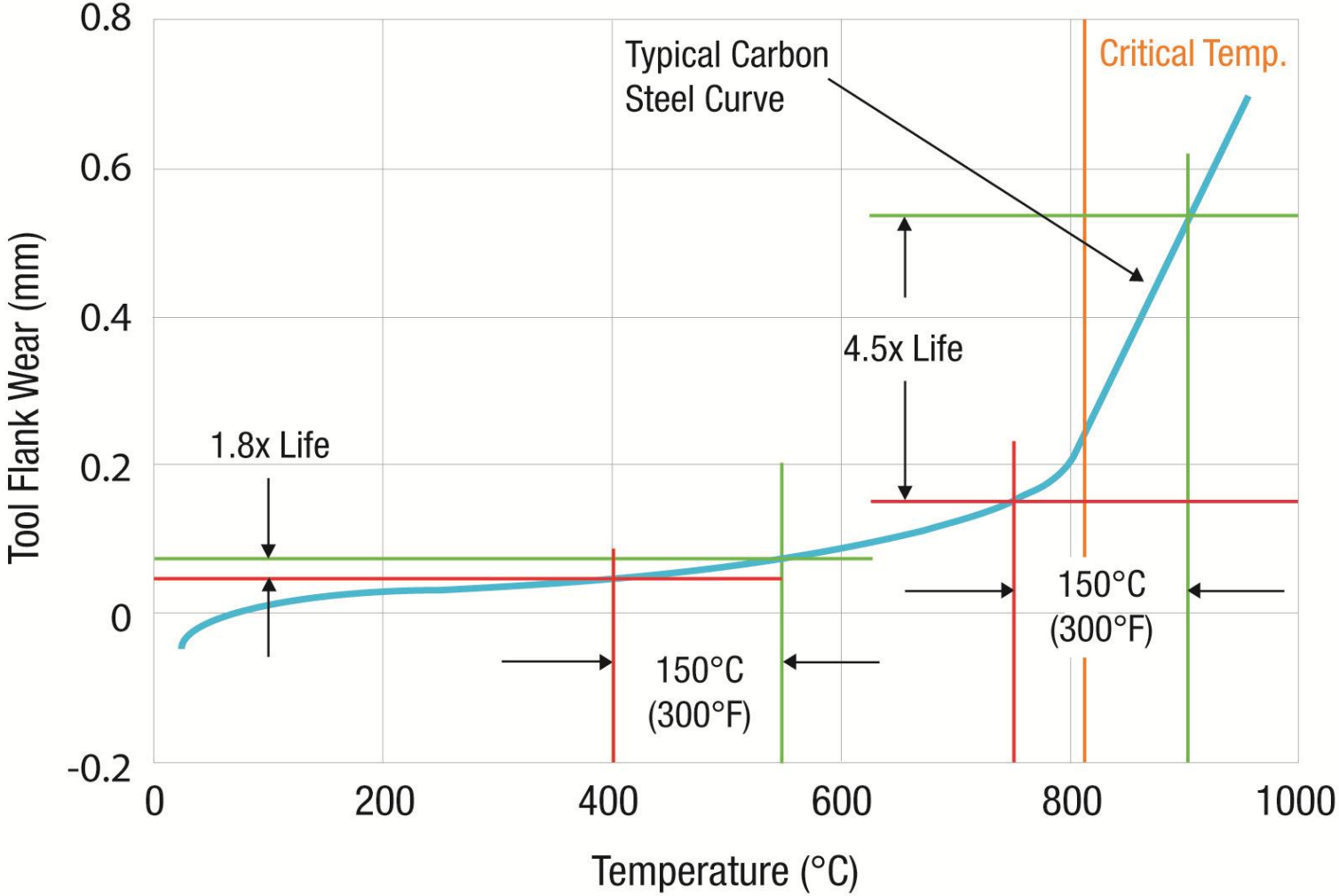

Why Liquid Nitrogen (LN_2)?

Environmental, Health, & Safety Advantages:

- Nitrogen is an inert atmospheric gas which is 78% of the air we breath
- Very easily safeguarded with an Oxygen sensor
- LN_2 is not a Greenhouse gas
- Eliminates disposal, management, and infrastructure associated with flood coolants
- Contamination-free for special machining requirements like medical

LN_2 Is The Better Choice In Comparison To Other "Cold" Alternatives:

- LN_2 very effective at **low flow rates** (0.1L/edge/min.)
- CO_2 is a Greenhouse gas
- Small difference in bulk cost of CO_2 vs. LN_2 cannot make-up for the higher CO_2 pressurization & flow rates
- Oxygen is a powerful oxidizing agent with flammability risks
- "400º Difference" between conventional coolant and LN_2 cooling technology

Cooling Media	Boiling Point	Approximate Pressure
Liquid Nitrogen	77K [-321º F]	1.5 bar [22 psi]
Liquid Air	78K [-319º F]	1.5 bar [22 psi]
Liquid Oxygen	90K [-297º F]	1 bar [15 psi]
CO_2 (Gas)	200K [-100º F]	3 bar [43 psi]
CO_2 (Liquid)	220K [-64º F]	7 bar [100]
CO_2 (supercritical)	300K [80º F]	100 bar [1450 psi]
Flood Coolant High Pressure Ultra High Pressure	294K [70º F] Operating Temperature	3.5 bar [50 psi] 70 bar [1000 psi] 150 bar [2175 psi]

MAG's Cryogenic Evolution

- **Research and Development since 2003**
- **Phase 1** development in partnership with the Small Business Innovation Research (SBIR), US Navy, and Bell Helicopter (V22 program)
- **Phase 2** development displayed at IMTS 2010
- **Phase 3** development in partnership with Lockheed Martin Aeronautics:
  - Focus on cost reduction for the F-35 JSF program
  - Approved for F-35 Titanium roughing; finish machining expected by Q4 2012
  - Development displayed at imX and EMO 2011
  - Seven new MAG Cryogenic machine platforms demonstrated at 2011 trade shows
- **Production ready new machines and aftermarket retrofits available now**
- **Strategic-range of Cryogenic CYCLO CUT ® cutting tools**
- **Exclusive license to the intellectual property of Creare:**
  - Multiple Creare & MAG patents issued & pending

MAG Cryogenic Machining Technology

Development and Intellectual Property:

- Expanding Intellectual Property; Cryogenic processes, tooling, spindles, & LN_2 delivery
- Machine development and integration on (7) MAG platforms (HMC, VMC, and V&H Lathes)
- Expanding application parameters for workpiece materials (Ti, Composite, CGI, Steels, Inconel)

Commercialization:

- Collaborating with strategic Customers:
  - Securing Customer sponsorship
  - Focused tool & process tests for strategic partner
- Cryogenic trade shows & displays:
  - 2010 IMTS Intro, imX learning lab, VMC 960, & HMC 1600 5 axis
  - (5) Cryogenic platforms of milling, turning, & boring of Ti, CGI, Steel, Inconel, & Composites at EMO
  - **EMO innovation award**
  - **Gold recipient for King** awards

New Equipment Digest KING awards

Cryogenic System Components
(Source, Brain, Feed, Spindle, Tool)

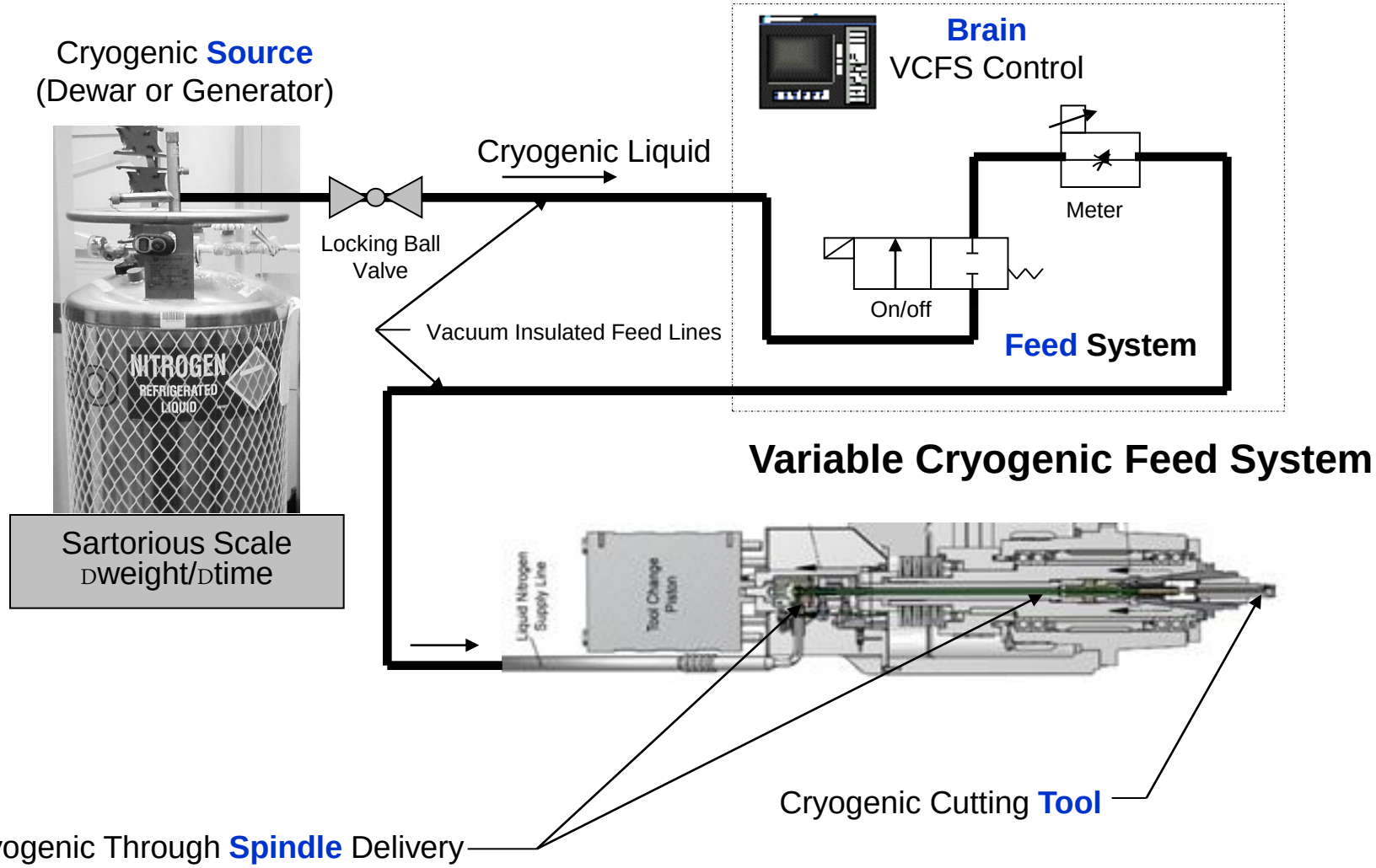

Cryogenic Spindle Technology

- **Cryogenic Delivery Through Spindle:**
  - Vacuum insulated spindle tube insures the "cold" cools the tool, not the spindle
  - Flow control behind spindle meters an engineered volume of LN_2
- **Excellent R&M:**
  - Long seal life
  - No thermal cycling issues
  - No affect to spindle bearings
  - Over 3 years of continuous testing
- **1st Generation**:
  - Non-rotating vacuum insulated tube
  - Axial tube actuator / valve
- **2nd Generation:**
  - Rotating vacuum insulated tube for
  - High speed horizontal applications

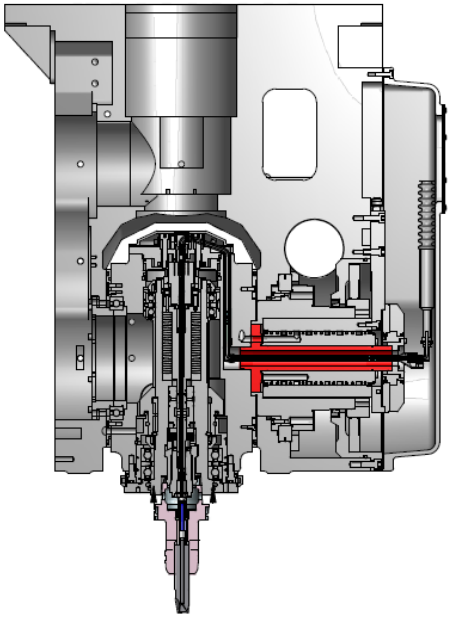

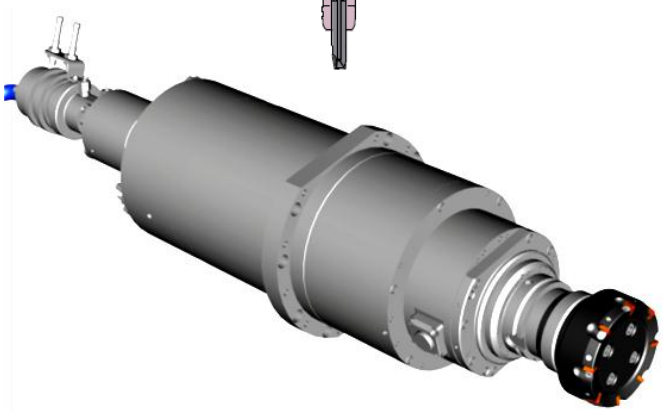

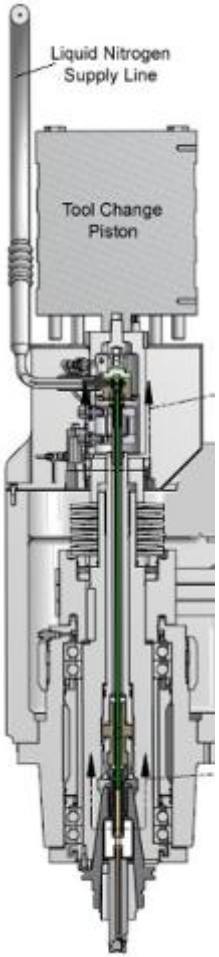

Cryogenic Cutting Tools

- **CYCLO CUT ® Brand**
  - Patents Issued & Pending
  - Cryogenically optimized
  - Insulated durable tooling
  - Cryogen to the cutting edge
  - Solid carbide end mills and drills
  - Indexable end mills, face mills, turning and boring tools

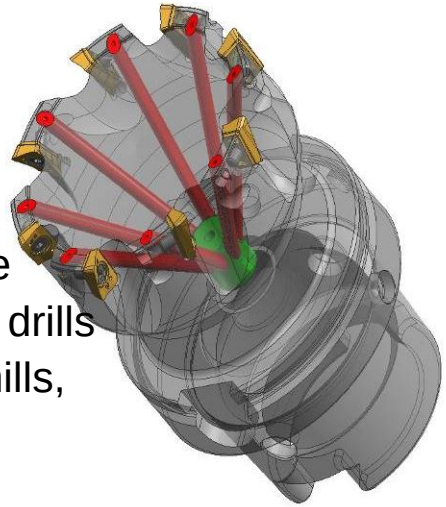

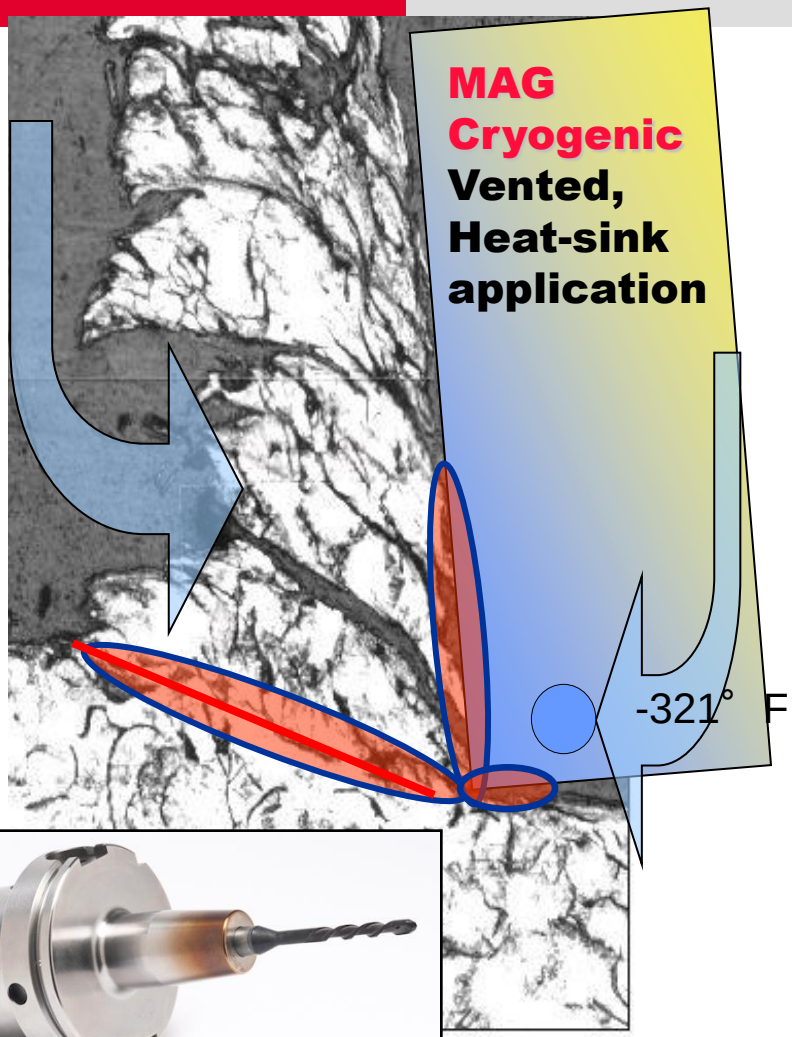

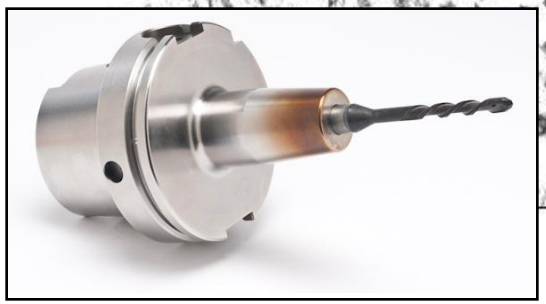

Titanium Link Machining (imX)
- Aerospace -

Application:

- Machine: VMC 960
- Material:Ti-6Al-4V
- Face, plunge, & peripheral milling, as well as drilling
- Indexable and solid carbide tools
- “Real” part manufacturing (25 links produced @ imX)

Advantages of Cryogenic technology:

- In comparison to flood coolant:
  - Up to 2X increase in processing speed
  - Improvement in tool life
  - LN_2 usage cost less than coolant
- Official JSF certified technology for “roughing” Ti

5-axis Titanium Blisk Machining
- Aerospace -

Application:

- Material:Ti-6Al-4V
- Cryogenic machining with MQL
- Tool diameter: 16mm and 18mm
- Trochoidal 5 axis milling
- Cutting speed: 72 m/min

Advantages of Cryogenic technology:

- 30% higher feed rate
- 60% increase in tool life

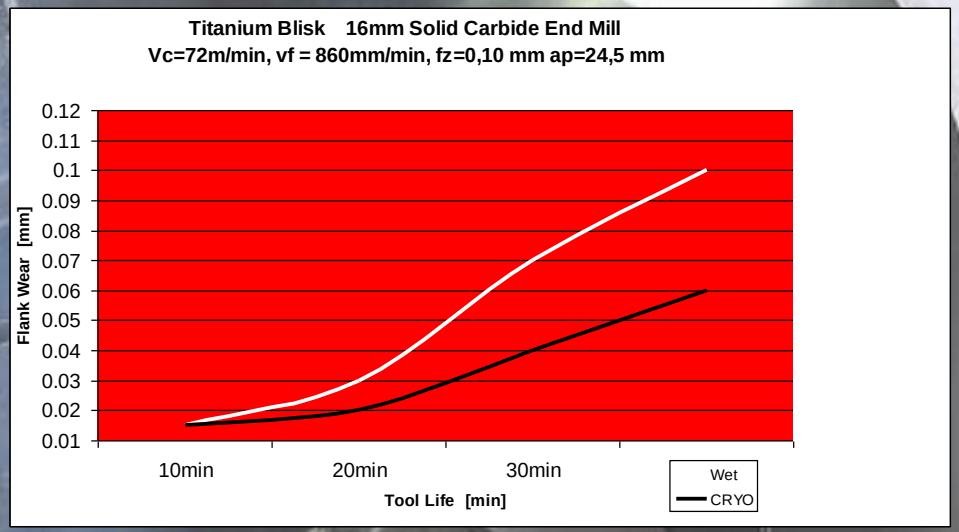

Titanium Facing / Turning
- Aerospace / Industrial Equipment -

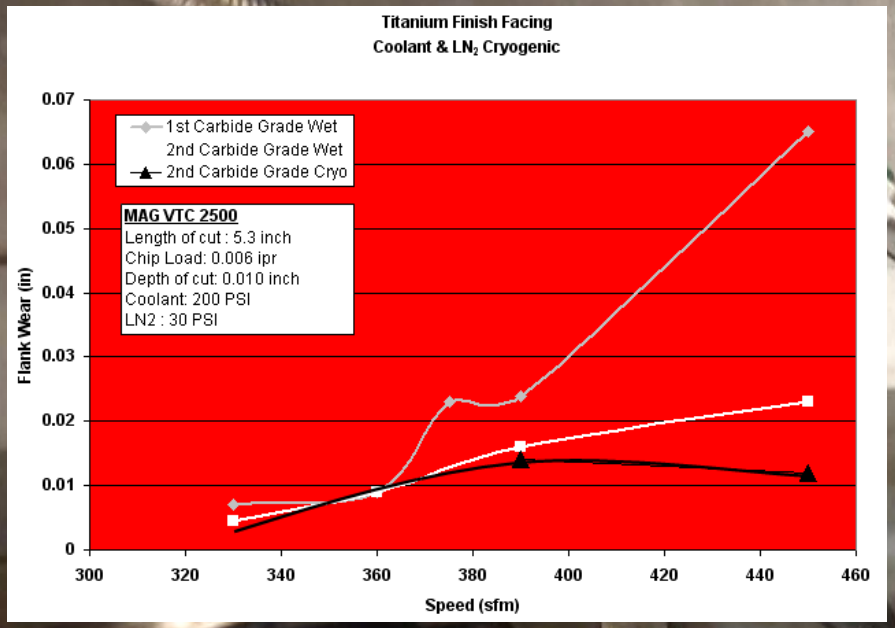

Application:

- Material:Ti-6Al-4V
- Cryogenic machining
- Cutting Speed: 450 SFM

Advantages of Cryogenic technology:

- 2X tool life compared to wet

Machine, MAG VTC2500

HMC 1600 With 5X Cryogenic Head
- Industrial Equipment -

Application:

- Machine: HMC 1600 5X
- Cryo delivery through tilt head **(Patent Disclosure Filed)**
- 1st generation 2-dewar feed system (source & pressure)
- Medium Alloy & medium carbon steel work piece
- High-feed helical milling process

Advantages of Cryogenic technology:

- No coolants, near dry chips
- More than three times (3X) tool life gain:
  - Only (0.012" flank wear) after 435 cubic inches
  - Manageable notch wear (see photo below)

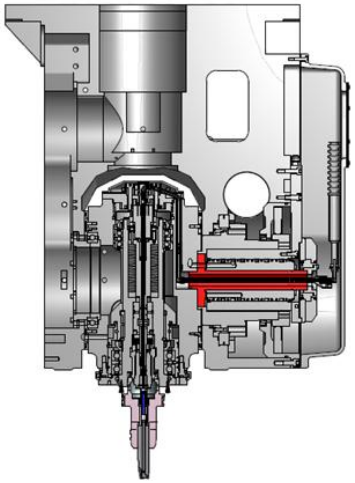

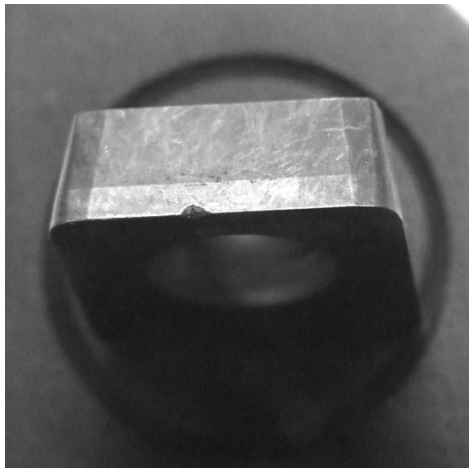

Composite Milling and Drilling
- Aerospace -

Application:

- Barrel Drill & Trim Machine:
  - Carbon composite material
  - Dry machining parameters

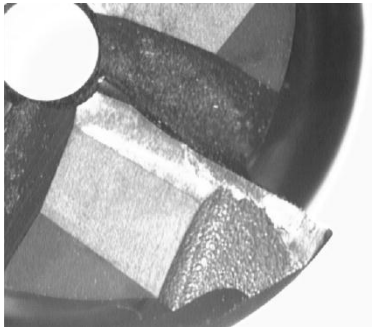

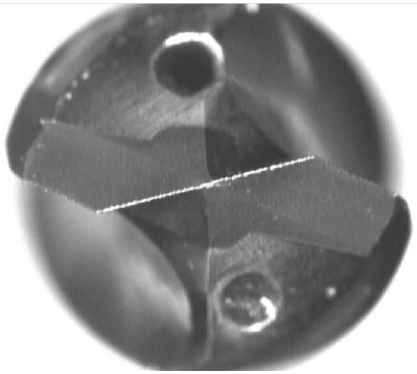

Advantages of Cryogenic technology:

- Control machining temperatures below resin critical temperatures:
  - Prevents melt-out as tools wear
  - Reduction of fiber pull-out increases grip load against the less affected composite fibers
  - Temporarily and locally increases composite strength to provide clean drill exit edges
- Control tool edge temperature to maintain cutter edge sharpness and prolong tool life:
  - Tool life increases in trimming compared to industry standards for dry machining
  - Drilling speed increases compared to industry standards for dry machining

Open Discussion